KYJ BOILER SYSTEMS

Thermal Oil Boiler General Flow System

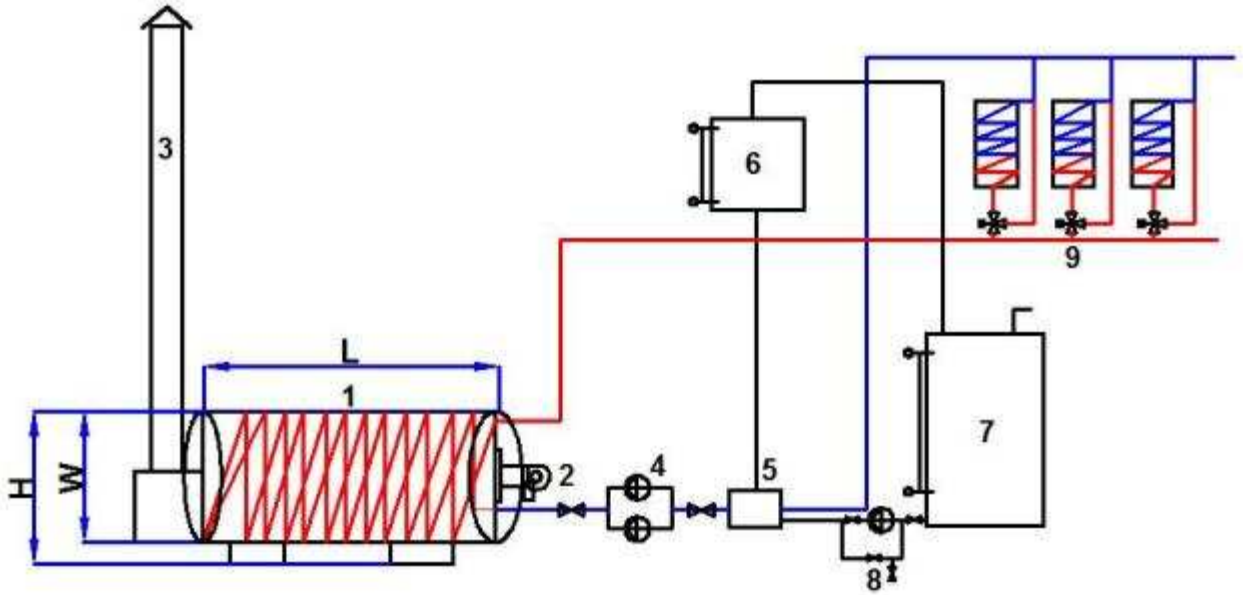

THERMAL OIL BOILER SYTEM GENERAL FLOW				
1-BOILER	3-CHIMNEY	5-DEGASSER	7-OIL STROGE TANK	9-CONSUMERS
2-BURNER	4-OIL PUMPS	6-EXPANTION TANK	8-SERVIS PUMP	

ÖZKÖSEOĞLU®
PASLANMAZ KİMYA TESİSLERİ MAKİNA SANAYİ VE TİC. LTD. ŞTİ.
İkitelli Organize San. Blg. Metal-İş Sanayi Sitesi 10. Blok No. 22-24-26-28
34670 İkitelli - İstanbul / TÜRKİYE • www.ozkoseoglu.net • info@ozkoseoglu.net
Tel : +90 (212) 549 56 40 - 549 56 41 - 549 80 23 Fax : +90 (212) 549 42 84

KYJ BOILER SYSTEMS

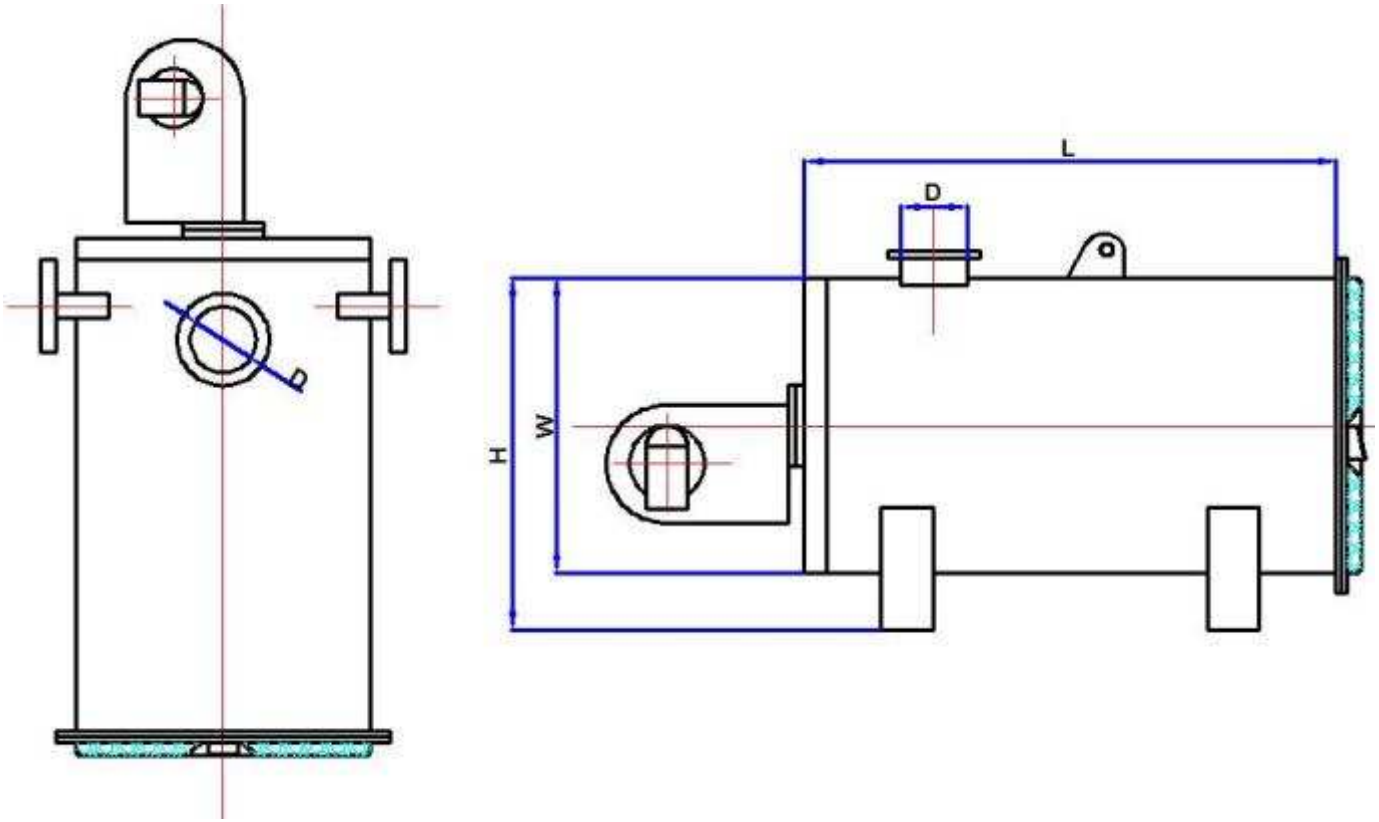

ÖZKÖSEOĞLU®
PASLANMAZ KİMYA TESİSLERİ MAKİNA SANAYİ VE TİC. LTD. ŞTİ.
İkitelli Organize San. Blg. Metal-İş Sanayi Sitesi 10. Blok No. 22-24-26-28
34670 İkitelli - İstanbul / TÜRKİYE • www.ozkoseoglu.net • info@ozkoseoglu.net
Tel : +90 (212) 549 56 40 - 549 56 41 - 549 80 23 Fax : +90 (212) 549 42 84

KYJ BOILER SYSTEMS

Technical Specifications*
Type: KYJ150 - KYJ4000

Standart Sizes	KW	180	300	540	780	1000	1200	1400	1800	2400	3000	3500	4000	4500
	MCal/h	150	250	450	650	850	1.000	1.200	1.500	2.000	2.500	3.000	3.500	4.000
Lenght (mm)	L	1600	2050	2370	3420	3580	4020	4610	4760	4900	5200	5460	5750	6650
Width (mm)	W	1080	1260	1470	1600	1760	1980	2200	2350	2500	2800	2880	2880	2900
Height (mm)	H	1400	1510	1680	1870	1960	2250	2450	2500	2750	3050	3340	3340	3450
E. Weight (mTon)	W	1,45	2,1	3,4	4,5	5,2	7,5	8,1	9,2	11,3	14,1	16,2	19,1	22,3
Exhaust (mm)	D	240	310	350	350	420	420	420	480	500	500	640	640	640
İnlet (DN)		40	50	65	65	80	100	100	125	150	150	150	150	200
Oil Capacity (m3)	m3	0,15	0,23	0,5	0,9	1,1	1,35	1,6	1,88	2,2	2,75	3,5	3,9	4,5

ÖZKÖSEOĞLU®
PASLANMAZ KİMYA TESİSLERİ MAKİNA SANAYİ VE TİC. LTD. ŞTİ.
İkitelli Organize San. Blg. Metal-İş Sanayi Sitesi 10. Blok No. 22-24-26-28
34670 İkitelli - İstanbul / TÜRKİYE • www.ozkoseoglu.net • info@ozkoseoglu.net
Tel : +90 (212) 549 56 40 - 549 56 41 - 549 80 23 Fax : +90 (212) 549 42 84

KYJ BOILER SYSTEMS

ÖZKÖSEOĞLU®
PASLANMAZ KİMYA TESİSLERİ MAKİNA SANAYİ VE TİC. LTD. ŞTİ.
İkitelli Organize San. Blg. Metal-İş Sanayi Sitesi 10. Blok No. 22-24-26-28
34670 İkitelli - İstanbul / TÜRKİYE • www.ozkoseoglu.net • info@ozkoseoglu.net
Tel : +90 (212) 549 56 40 - 549 56 41 - 549 80 23 Fax : +90 (212) 549 42 84